CLASS

COORDINATING EDGE AND CLOUD
FOR BIG DATA ANALYTICS

The CLASS Software Architecture

Eduardo Quiñones
{eduardo.quinones@bsc.es}
Barcelona Supercomputing Center (BSC-CNS)

Barcelona Supercomputing Center
Centro Nacional de Supercomputación

Comune di Modena

MASERATI

UNIMORE
UNIVERSITÀ DEGLI STUDI DI MODENA E REGGIO EMILIA

IBM

Atos

The CLASS project has received funding from the European Union's Horizon 2020 research and innovation programme under the grant agreement No 780622

General Information

- Edge and **Cl**oud Computation: **A** Highly Distributed **S**oftware Architecture for Big Data Analytic**S**
  - Under the scope of ***H2020 ICT16-2017 (RIA)*** - *Big data PPP: research addressing main technology challenges of the data economy*
  - **42 months** (starting January 2018)
  - **3.900.803 €** budget

Barcelona Supercomputing Center
Centro Nacional de Supercomputación

Comune di Modena

MASERATI

UNIMORE
UNIVERSITÀ DEGLI STUDI DI MODENA E REGGIO EMILIA

IBM

Atos

Motivation: The Importance of CLASS

Cloud computing

- Data storage
- High computation capabilities

Edge computing

- Data collection and transfer
- Limited computation capabilities

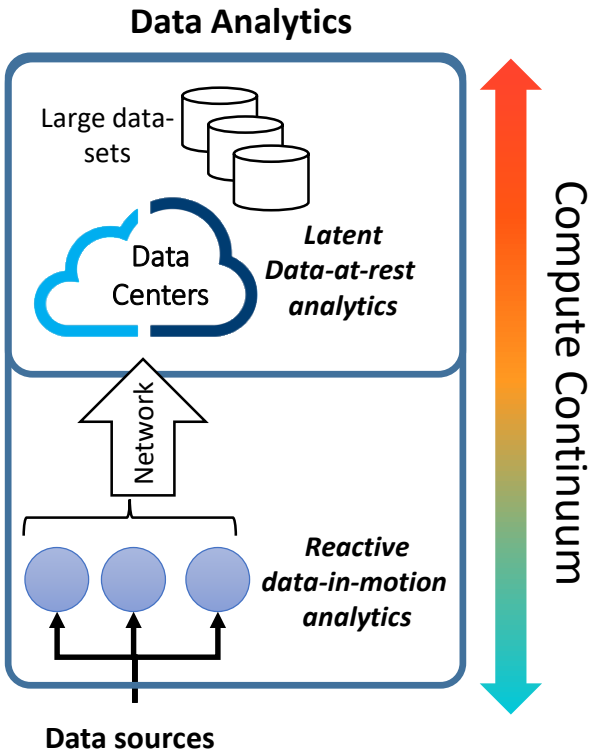

1. **Geographically distributed data sources** and data analytics requirements, e.g., smart cities
2. The fulfillment of **real-time requirements** inherited from the application domain
3. Constant increment of **volume, variety** and **velocity** of data-sets

A coordination of **edge and cloud resources is needed!**

The Vision of CLASS

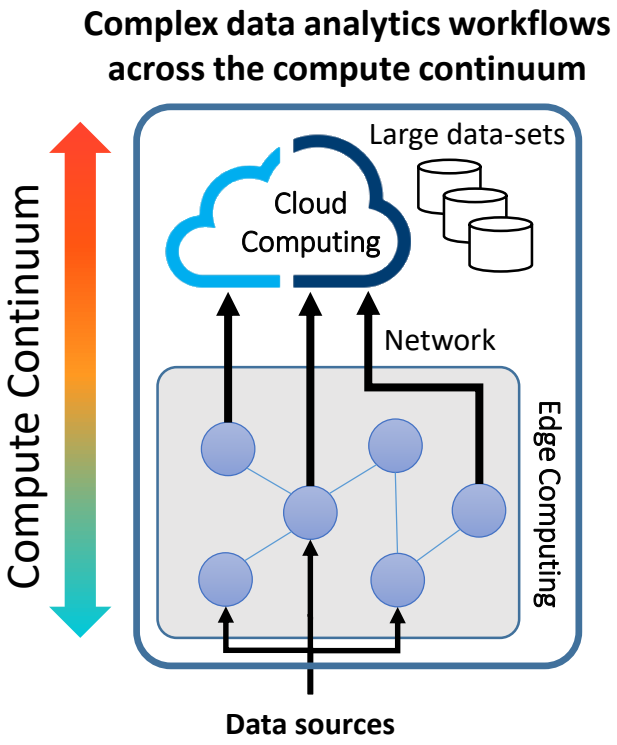

1. Significantly **increase the capabilities** of the data analytics
   - Integrate both responsive data-in-motion and latent data-at-rest analytics in a **single complex workflow**
2. Fulfill the **real-time requirements**
3. Use advance parallel and energy-efficiency embedded platforms at edge side

Productivity
- \+ **Programmability**
- \+ **Portability/Scalability**
- \+ **(Guaranteed) Performance**

Main Contribution:
The CLASS Software Architecture

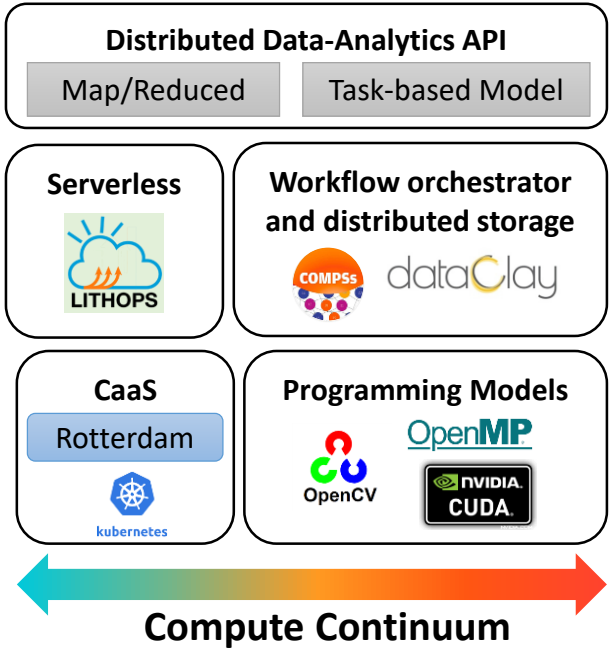

- Integrate technologies from different **computing domains** into a single development framework
  1. Powerful API for the development of advanced **data-analytics methods**
  2. **QoS Serverless** and **CaaS** cloud technologies
  3. **Advanced orchestration methods for time-predictable** workflow scheduling and deployment across the compute continuum
  4. Used of **advanced embedded parallel and heterogeneous processor architectures**

Smart City Use-Case

- Deployed on the **Modena Automotive Smart Area (MASA)** in the city of Modena (Italy)
  1. A **living lab urban area** with IoT connectivity and a compute continuum infrastructure
  2. **Three connected cars** equipped with sensors (cameras and LiDAR) and V2I communication
- Information exchange between the city and vehicles to enhance mobility
  1. Computation of emission of pollution in real-time
  2. Advanced Driving Assistant Systems
     - Virtual Mirror
     - Two Sources of Attention

Virtual Mirror Use-Case

Data-Analytics Methods

1. Sensor Fusion
2. Object Detection
3. Object Tracking
4. Data deduplication
5. Trajectory Prediction
6. Air pollution computation
7. Data model creation
8. Collision Detection (CD)
9. Generation of WA
10. WA alert visualization

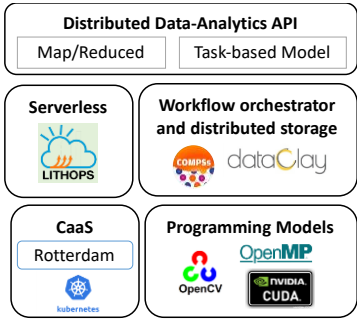

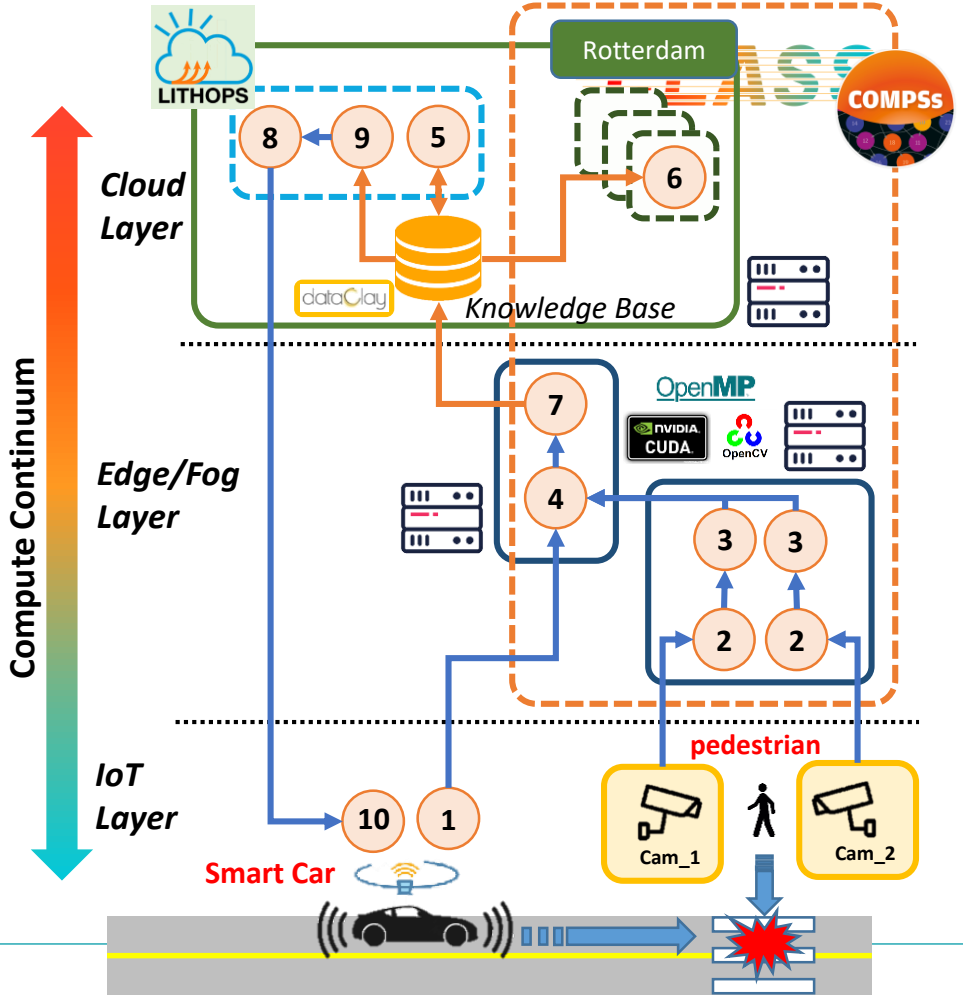

Summary

1. CLASS aims to develop a novel **software architecture** with the following capabilities:
   - Increase data analytics capabilities by efficiently combine data-in-motion and data-at-rest analytics into **complex workflows**
   - Increase the development and deployment **productivity** of systems requiring data-analytics
   - Guarantee the **real-time properties** inherited from the domain
2. CLASS aims to apply the software architecture to develop a distributed sensing/computing infrastructure within the MASA for advanced urban mobility applications

CLASS

www.class-project.eu
Twitter: **@EU_CLASS**
LinkedIn: **linkedin.com/company/classproject**